TADANO

SPEC. SHEET No. GT-550E-1-00202/C-101
DATE February, 2007

TADANO TRUCK CRANE

MODEL : GT-550EX EURO-2

GENERAL DATA

CRANE CAPACITY	55,000 kg at 3.0 m	
BOOM	5-section, 11.1 m – 42.0 m	
DIMENSION		
Overall length	approx.	13,480 mm
Overall width	approx.	2,820 mm
Overall height	approx.	3,680 mm
MASS		
Gross vehicle mass	approx.	39,800 kg
-front	approx.	15,900 kg
-rear	approx.	23,900 kg
PERFORMANCE		
Max. traveling speed	computed	83 km/h
Gradeability (tan θ)	computed	53%

Specifications are subject to change without notice.

CRANE SPECIFICATIONS

MODEL	GT-550EX
CAPACITY	55,000 kg at 3.0 m
BOOM	5-section full power partially synchronized telescoping boom of hexagonal box construction with 6 sheaves at boom head. The synchronization system consists of 2 telescope cylinders, extension cables and retraction cables. Hydraulic cylinders fitted with holding valves. Selection of 2 boom telescoping modes. Fully retracted length……..11.1 m Fully extended length…….. 42.0 m Extension speed……30.9 m in 123 s
JIB	2-staged boom extension type. Triple offset ($5^o/25^o/45^o$)type. Stored under base boom section. Single sheave at jib head. Length……...9.0 m and 14.6 m
SINGLE TOP (AUXILIARY BOOM SHEAVE)	Single sheave. Mounted to main boom head for single line work.
ELEVATION	By a double-acting hydraulic cylinder, fitted with holding valve. Elevation speed……...-2° to + 80° in 68 s
HOIST - Main winch	Variable speed type with grooved drum driven by hydraulic axial piston motor through winch speed reducer. Power load lowering and hoisting. Equipped with automatic brake (Neutral brake) and counterbalance valve. Controlled independently of auxiliary winch. Single line pull……. 42.2 kN {4,300kgf } Single line speed……143 m/min (at the 4th layer) Wire rope……..spin-resistant type (Non-spin type for 35 ton capacity hook block) Diameter x length…….. 19.05 mm x 227 m
HOIST- Auxiliary winch	Variable speed type with grooved drum driven by hydraulic axial piston motor through winch speed reducer. Power load lowering and hoisting. Equipped with automatic brake (Neutral brake) and counterbalance valve. Controlled independently of main winch. Single line pull……..44.1 kN {4,500kgf } Single line speed……123 m/min (at the 2nd layer) Wire rope……..spin-resistant type Diameter x length……..19.05 mm x 127 m

SWING

Hydraulic axial piston motor driven through planetary speed reducer.
Continuous 360° full circle swing on ball bearing slew ring. Equipped with manually locked/released swing brake.

Swing speed…….. 1.9 min^{-1} {rpm}

HYDRAULIC SYSTEM

Pumps……...Quadruple gear pumps driven by carrier engine through P.T.O.

Control valves……...Multiple valves actuated by pilot pressure with integral pressure relief valves.

Circuit…… Equipped with air cooled type oil cooler.
Oil pressure appears on AML display for main circuit.

Hydraulic oil tank capacity…..
approx. 690 liters

Filters……Return line filter

CRANE CONTROL

By 4 control levers based on ISO standard layout.
Control lever stands can change neutral positions and tilt for easy access to cab.

CAB

One sided one-man type, steel construction with sliding door access and tinted safety glass windows opening at side. Operator's 3 way adjustable seat with headrest and armrest.

SAFETY DEVICES

Boom angle indicator
Pendant type over-winding cutout
Winch automatic fail-safe brake
Hook safety latch
Pilot check valves
Holding valves
Counterbalance valves
Hydraulic pressure relief valves
Front jack overload alarm

TADANO Automatic Moment Limiter (Model:AML-L)

Main unit in crane cab gives audible and visual warning of approach to overload. Automatically cuts out crane motions before overload.
With working range (load radius and /or boom angle and /or tip height and /or swing range) limit function.
Nine functions are constantly displayed.
Digital liquid crystal display:

- Either boom angle or moment %
- Either boom length or potential hook height
- Either actual working radius or swing angle
- Actual hook load
- Permissible load
- Either jib offset angle or number of parts line of rope
- Boom position indicator
- Outrigger position indicator

Bar graphical display:

- Either moment as percentage or main hydraulic pressure (Display changes by alternation key)

OUTRIGGERS

Hydraulically operated H-type outriggers. Each outrigger controlled simultaneously or independently from either side of carrier. Equipped with sight level gauge. Floats mounted integrally with the jacks retract to within vehicle width. All cylinders fitted with pi-lot check valves.
Crane operation with different extended length of each outrigger.
Equipped with extension width detector for each outrigger.

Extended width
- Fully…… 6,800 mm
- Middle……4,600 mm
- Minimum…… 2,390 mm

Float size (Diameter)…… 400 mm

FRONT JACK

A fifth hydraulically operated outrigger jack. Mounted to the front frame of carrier to permit 360° lifting capabilities. Hydraulic cylinder fitted with pilot check valve. Equipped with front jack extension detector.

Float size (Diameter)…… 350 mm

COUNTERWEIGHT

Integral with swing frame.

Mass……...4,200 kg

STANDARD EQUIPMENT

4.5 t capacity hook block (swivel hook)
Control pedals for boom hoist and boom telescoping.
3 working lights
External lamp (AML)
Cable follower
Winch drum mirror (Hoist mirror)
Electric fan
Sun visor
Sun shade
Cab floor mat
Red warning lamp (Top boom)

OPTIONAL EQUIPMENT

- ☐ 55 t capacity hook block (6 sheaves)
- ☐ 35 t capacity hook block (4 sheaves)
  *[in combination with non-spin wire rope for main winch]
- ☐ 20 t capacity hook block (2 sheaves)
- ☐ Winch drum rotation indicator for main and auxiliary winch
- ☐ Air conditioner (hot water heater and cooler)

NOTE : Each crane motion speed is based on unladen conditions.

CARRIER SPECIFICATIONS

MANUFACTURER	TADANO LTD.
MODEL	TC-4255
TYPE	Left hand steering, 8x4
ENGINE	Model…… NISSAN PF6 Type…….. 4 cycle, 6 cylinder in line, direct injection, water cooled diesel engine with turbocharger. Piston displacement……12,503 cm^3 Bore x Stroke…….. 133 mm x 150 mm Max. output (JIS)……257 kW {350PS/345hp} at 2100 min^{-1} {rpm} Max. torque (JIS)……1460 Nm {150 kgf-m} at 1200 min^{-1} {rpm}
CLUTCH	Dry single plate, hydraulically operated clutch release mechanism with air assisted booster.
TRANSMISSION	7 forward and 1 reverse speeds, synchromesh on 2nd -7th gear and constant-mesh on 1st and reverse gear.
AXLES	Front……. Reverse-elliot type Rear…….Full floating type.
STEERING	Recirculating ball screw type with linkage power assistance.
SUSPENSION	Front……. Leaf spring. Rear…….Equalizer beams and torque rods.
BRAKE SYSTEM	Service…… Full air brake with multiprotection valve and auto slack adjuster on all wheels, dual airline system, internal expanding leading and trailing shoe type. Parking…… Pneumatically controlled spring brake, acting on all rear axles. Auxiliary…….. Electro-pneumatic operated exhaust brake. Emergency……. Pneumatically controlled spring brake, acting on all rear axles.
ELECTRIC SYSTEM	24 V DC.2 batteries of 12 V (JIS)115F51, 96Ah at 5-hour rate Alternator 24V-50A
FUEL TANK CAPACITY	300 liters
CAB	Steel construction, one sided 2-man type. Driver's seat…... Adjustable suspension type.
TIRES	Front……. 315/80 R 22.5 156/150, Single x 4 Rear…….315/80 R 22.5 156/150, Dual x 4 Spare……...315/80 R 22.5 156/150, Single x 1
TURN RADIUS	Min. turning radius (at center of extreme outer tire) …….10.8 m

STANDARD EQUIPMENT

Fan clutch: Viscous-type
Intake air heater
Overheating warning buzzer
Cooling water level warning buzzer
Engine over-run alarm
PTO hour meter
Seat belt: 3 point type for driver, 2 point type for passenger
Passenger seat
Tilting-telescoping steering wheel
Windshield wiper (with intermittent wiping) and washer
Window glass: Tinted, Infrared and Ultraviolet rays absorption
Tachometer
Low air pressure warning buzzer
AM/FM radio
Car heater (Hot water type) with defroster
Third differential gear lock
Speedometer (with odometer)
Sun visor
Spare tire carrier with lock key
Toolbox with lock key
Fuel tank cap with lock key
Back-up light
Back-up alarm
Air filter warning light (Instrument cluster)
Towing hook (Front and rear, Eye type)
Ashtray
Cigarette lighter
Owner's tool set
Cab floor mat
Car cooler (Refrigerant: R134a)
Front fog lamps
Rear fog lamp
Side marker lamps
Side reflectors
R2000 Side mirrors

OPTIONAL EQUIPMENT

☐ Air inflator
☐ Tachograph

RATED LIFTING CAPACITIES

Unit: kg CLASS OF CRANE: C3

Outriggers fully extended 6.8 m										
Load radius (m)	11.1 m boom	15.0 m boom	18.8 m boom		26.6 m boom		34.3 m boom		38.1 m boom	42.0 m boom
3.0	55,000	40,000	28,000	20,000						
3.5	43,700	40,000	28,000	20,000						
4.0	38,500	38,100	28,000	20,000						
4.5	34,200	33,800	28,000	19,800	20,000	14,000				
5.0	30,800	30,400	28,000	19,000	20,000	14,000				
5.5	27,800	27,400	27,200	18,200	20,000	13,600				
6.0	25,400	25,000	24,700	17,500	20,000	12,800	14,000	8,000		
6.5	23,200	22,800	22,500	16,800	18,900	12,000	14,000	8,000		
7.0	21,400	21,000	20,700	16,200	17,800	11,400	13,500	8,000	8,000	8,000
7.5	19,700	19,300	19,100	15,700	16,700	10,800	13,000	8,000	8,000	8,000
8.0	18,300	17,900	17,600	15,200	15,800	10,200	12,500	8,000	8,000	8,000
9.0	15,200	14,600	14,200	14,300	14,200	9,300	11,300	7,600	8,000	8,000
10.0		11,600	11,300	13,500	12,500	8,500	10,400	7,000	7,500	8,000
11.0		9,500	9,100	11,400	10,300	7,800	9,600	6,400	6,900	7,500
12.0		7,800	7,500	9,600	8,600	7,200	8,800	5,800	6,400	6,900
14.0			5,100	7,200	6,200	6,200	6,800	4,900	5,500	5,900
16.0			3,500	5,500	4,500	5,400	5,100	4,200	4,700	5,200
18.0					3,300	4,700	3,900	3,600	4,100	4,200
20.0					2,400	3,700	3,000	3,200	3,600	3,200
22.0					1,700	3,000	2,200	2,800	2,800	2,500
24.0					1,200	2,400	1,600	2,500	2,200	1,900
26.0							1,200	2,100	1,800	1,400
28.0							800	1,700	1,400	1,000
30.0							500	1,400	1,000	700
32.0								1,100	700	450
34.0									500	
Telescoping condition (%)										
Telescoping mode	I, II	I	I	II	I	II	I	II	II	I, II
2nd boom	0	50	100	0	100	0	100	0	50	100
3rd boom	0	0	0	33	33	66	66	100	100	100
4th boom	0	0	0	33	33	66	66	100	100	100
Top boom	0	0	0	33	33	66	66	100	100	100

NOTES

1. Rated lifting capacities shown in the table are based on the condition that the crane is set on firm ground horizontally. Those above bold line are based on crane strength and those below, it is stability.
2. Rated lifting capacities in the stability area comply with part 2 /ISO 4305.
3. The mass of load handling devices such as hook blocks {570 kg for *55 ton capacity, 410 kg for *35 ton capacity, 400 kg for *20 ton capacity and 130 kg for 4.5 ton capacity} and slings, shall be considered part of the load and must be deducted from rated lifting capacities.
4. Without front jack extended, when the boom is within the Over-front, Rated lifting capacities are different from those for the boom in the Over-side and Over-rear.
5. Standard number of parts of line for each boom length is as shown below. Load per-line should not surpass 42.2 kN {4,300 kgf} for main winch rope and 44.1 kN {4,500 kgf} for auxiliary winch rope.

Boom Length	11.1 m	15.0 m	18.8 m	26.6 m	34.3 m	38.1 m	42.0 m	Jib/Single top
Number of parts line	**13/12	10	7	5	4	4	4	1

**:With single top (When the lifting capacity is 55,000 kg)

6. Special weather caution: Refer to the operation and maintenance manual.
7. For rated lifting capacity of single top, subtract the main hook mass from the relevant boom rated lifting capacity. Rated lifting capacity of single top should not exceed 4,500 kg.

Unit: kg CLASS OF CRANE: C3

Outriggers extended to middle 4.6 m										
Load radius (m)	11.1 m boom	15.0 m boom	18.8 m boom		26.6 m boom		34.3 m boom		38.1 m boom	42.0 m boom
3.0	32,000	28,000	28,000	20,000						
3.5	32,000	28,000	28,000	20,000						
4.0	32,000	28,000	28,000	20,000						
4.5	26,300	25,500	24,900	19,700	20,000	14,000				
5.0	20,200	19,200	18,700	18,900	20,000	14,000				
5.5	15,800	15,100	14,600	17,700	16,400	13,500				
6.0	12,800	12,200	11,800	14,600	13,300	12,700	14,000	8,000		
6.5	10,600	10,000	9,600	12,300	11,100	12,000	11,900	8,000		
7.0	8,900	8,300	8,000	10,500	9,400	11,100	10,100	8,000	8,000	8,000
7.5	7,500	7,000	6,600	9,100	8,000	9,700	8,700	8,000	8,000	8,000
8.0	6,400	5,900	5,500	7,900	6,800	8,500	7,500	8,000	8,000	7,900
9.0	4,700	4,200	3,900	6,100	5,100	6,700	5,800	7,100	6,500	6,100
10.0		3,000	2,700	4,800	3,800	5,300	4,500	5,600	5,200	4,800
11.0		2,100	1,800	3,800	2,900	4,300	3,500	4,600	4,200	3,800
12.0		1,300	1,000	3,000	2,100	3,500	2,700	3,800	3,400	3,000
14.0				1,900	1,000	2,300	1,600	2,600	2,200	1,900
16.0				1,100		1,500		1,800	1,400	1,000
18.0								1,200		
Telescoping condition (%)										
Telescoping mode	I, II	I	I	II	I	II	I	II	II	I, II
2nd boom	0	50	100	0	100	0	100	0	50	100
3rd boom	0	0	0	33	33	66	66	100	100	100
4th boom	0	0	0	33	33	66	66	100	100	100
Top boom	0	0	0	33	33	66	66	100	100	100

Unit: kg CLASS OF CRANE: C3

Outriggers extended to minimum 2.39 m						
Load radius (m)	11.1 m boom	15.0 m boom	18.8 m boom		26.6 m boom	
3.0	22,800	22,100	21,700	20,000		
3.5	16,900	16,300	15,900	18,600		
4.0	13,100	12,500	12,100	14,600		
4.5	10,400	9,900	9,500	11,900	10,800	12,500
5.0	8,400	7,900	7,600	9,800	8,800	10,400
5.5	6,900	6,500	6,100	8,300	7,300	8,800
6.0	5,700	5,300	5,000	7,000	6,100	7,600
6.5	4,800	4,300	4,000	6,000	5,100	6,500
7.0	4,000	3,500	3,200	5,200	4,300	5,700
7.5	3,300	2,900	2,600	4,500	3,600	5,000
8.0	2,700	2,300	2,000	3,900	3,000	4,400
9.0	1,800	1,400	1,100	2,900	2,100	3,400
10.0				2,200	1,400	2,700
11.0				1,600		2,100
12.0				1,100		1,600
Telescoping condition (%)						
Telescoping mode	I, II	I	I	II	I	II
2nd boom	0	50	100	0	100	0
3rd boom	0	0	0	33	33	66
4th boom	0	0	0	33	33	66
Top boom	0	0	0	33	33	66

Unit: kg CLASS OF CRANE: C3

Outriggers fully extended 6.8 m						
Boom angle	42.0 m boom					
	9.0 m jib			14.6 m jib		
	5° offset	25° offset	45° offset	5° offset	25° offset	45° offset
80°	3,500	2,300	1,300	2,500	1,200	700
79°	3,500	2,300	1,300	2,500	1,200	700
78°	3,500	2,300	1,300	2,500	1,200	700
77°	3,400	2,300	1,280	2,350	1,170	690
76°	3,250	2,240	1,260	2,220	1,140	680
75°	3,100	2,160	1,240	2,100	1,120	670
73°	2,840	2,020	1,200	1,890	1,070	650
70°	2,430	1,850	1,150	1,640	1,000	630
68°	2,200	1,730	1,120	1,500	950	620
65°	1,950	1,580	1,070	1,330	910	590
63°	1,780	1,450	1,030	1,220	850	580
60°	1,350	1,180	1,000	1,080	800	570
58°	1,050	920	850	800	750	560
55°	680	590	550	500	480	420
53°	470	410				

Outriggers fully extended 6.8 m						
Boom angle	38.1 m boom (telescoping mode II) or less than that					
	9.0 m jib			14.6 m jib		
	5° offset	25° offset	45° offset	5° offset	25° offset	45° offset
80°	3,500	2,300	1,300	2,500	1,200	700
79°	3,500	2,300	1,300	2,500	1,200	700
78°	3,500	2,300	1,300	2,500	1,200	700
77°	3,400	2,300	1,280	2,350	1,170	690
76°	3,250	2,240	1,260	2,220	1,140	680
75°	3,100	2,160	1,240	2,100	1,120	670
73°	2,840	2,020	1,200	1,890	1,070	650
70°	2,430	1,850	1,150	1,640	1,000	630
68°	2,200	1,730	1,120	1,500	950	620
65°	1,950	1,580	1,070	1,330	910	590
63°	1,780	1,450	1,030	1,220	850	580
60°	1,550	1,280	1,000	1,080	800	570
58°	1,380	1,200	980	1,000	770	560
55°	1,150	1,080	940	890	730	550
53°	1,000	1,000	920	820	710	540
50°	840					

Outriggers fully extended 6.8 m						
Boom angle	34.3 m boom (telescoping mode I) or less than that					
	9.0 m jib			14.6 m jib		
	5° offset	25° offset	45° offset	5° offset	25° offset	45° offset
80°	3,500	2,300	1,300	2,500	1,200	700
79°	3,500	2,300	1,300	2,500	1,200	700
78°	3,500	2,300	1,300	2,500	1,200	700
77°	3,400	2,300	1,280	2,350	1,170	690
76°	3,250	2,240	1,260	2,220	1,140	680
75°	3,100	2,160	1,240	2,100	1,120	670
73°	2,840	2,020	1,200	1,890	1,070	650
70°	2,430	1,850	1,150	1,640	1,000	630
68°	2,200	1,730	1,120	1,500	950	620
65°	1,950	1,580	1,070	1,330	910	590
63°	1,780	1,450	1,030	1,220	850	580
60°	1,550	1,280	1,000	1,080	800	570
58°	1,380	1,200	980	1,000	770	560
55°	1,150	1,080	940	890	730	550
53°	1,000	1,000	920	920	710	540
50°	840					

Unit: kg CLASS OF CRANE: C3

Outriggers extended to middle 4.6 m						
Boom angle	42.0 m boom					
	9.0 m jib			14.6 m jib		
	5° offset	25° offset	45° offset	5° offset	25° offset	45° offset
80°	3,500	2,300	1,300	2,500	1,200	700
79°	3,500	2,300	1,300	2,500	1,200	700
78°	3,080	2,280	1,300	2,500	1,200	700
77°	2,550	1,910	1,280	2,190	1,170	690
76°	2,090	1,580	1,260	1,800	1,140	680
75°	1,700	1,300	1,070	1,470	1,010	670
73°	1,070					

Outriggers extended to middle 4.6 m						
Boom angle	38.1 m boom (telescoping mode II) or less than that					
	9.0 m jib			14.6 m jib		
	5° offset	25° offset	45° offset	5° offset	25° offset	45° offset
80°	3,500	2,300	1,300	2,500	1,200	700
79°	3,500	2,300	1,300	2,500	1,200	700
78°	3,500	2,300	1,300	2,500	1,200	700
77°	3,400	2,300	1,280	2,350	1,170	690
76°	2,910	2,200	1,260	2,220	1,140	680
75°	2,480	1,900	1,240	2,100	1,120	670
73°	1,780	1,390	1,160	1,520	1,070	650
70°	1,010					

Outriggers extended to middle 4.6 m						
Boom angle	34.3 m boom (telescoping mode I) or less than that					
	9.0 m jib			14.6 m jib		
	5° offset	25° offset	45° offset	5° offset	25° offset	45° offset
80°	3,500	2,300	1,300	2,500	1,200	700
79°	3,500	2,300	1,300	2,500	1,200	700
78°	3,500	2,300	1,300	2,500	1,200	700
77°	3,400	2,300	1,280	2,350	1,170	690
76°	2,910	2,200	1,260	2,220	1,140	680
75°	2,480	1,900	1,240	2,100	1,120	670
73°	1,780	1,390	1,160	1,520	1,070	650
70°	1,010					

WORKING RANGE

Telescoping mode I

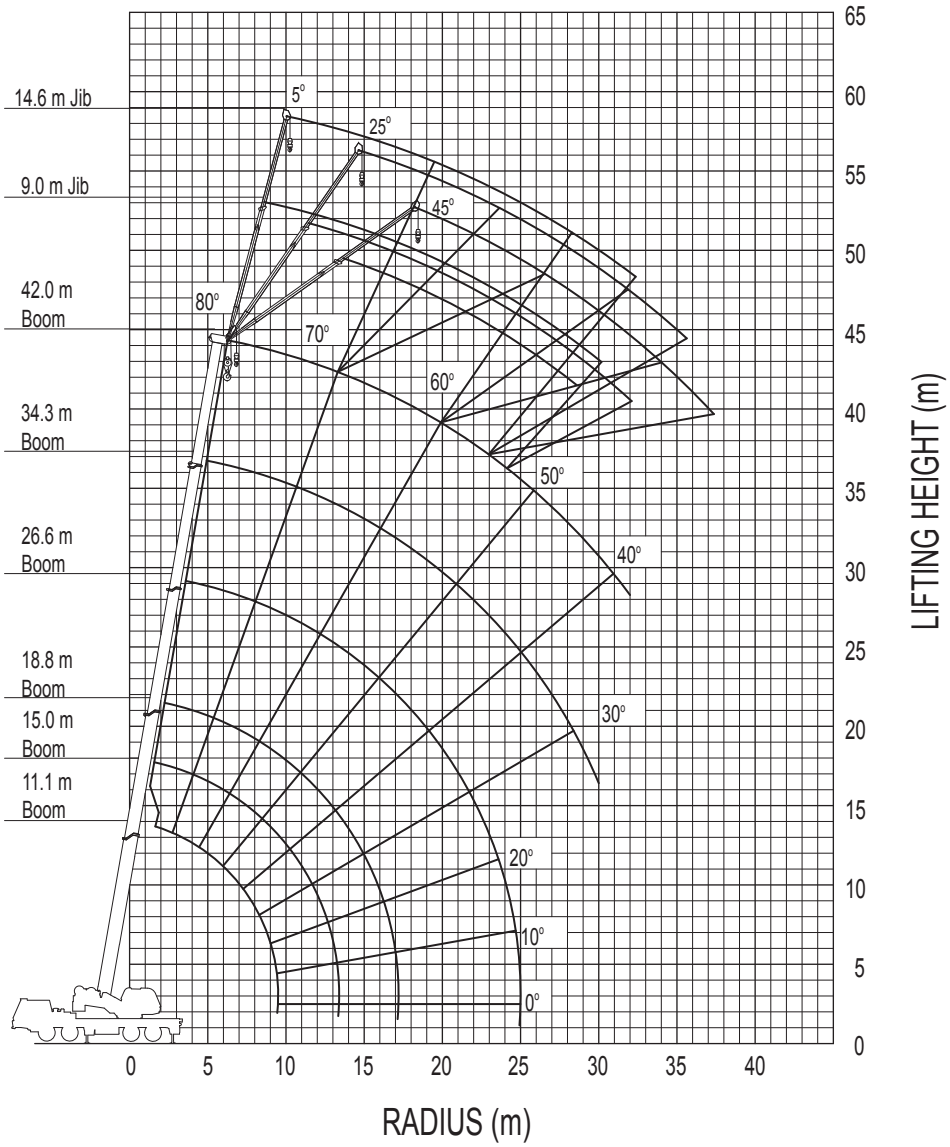

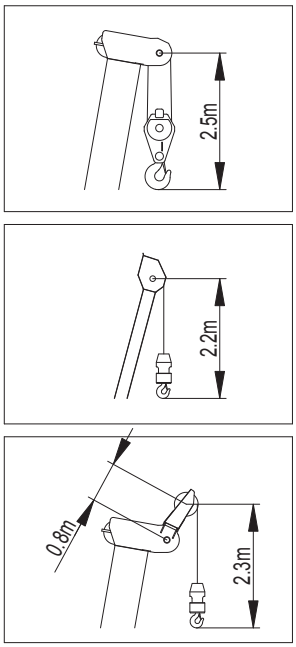

Boom Length

42.0 m Boom

34.3 m Boom

26.6 m Boom

18.8 m Boom

15.0 m Boom

11.1 m Boom

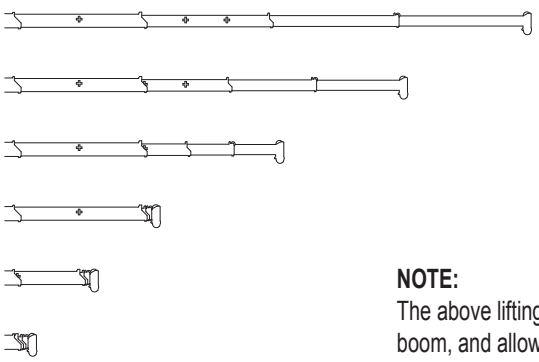

NOTE:
The above lifting height and boom angle are based on a straight (unladen) boom, and allowance should be made for boom deflection obtained under laden conditions. The above working range is shown on condition with out-riggers fully(6.8m) extended.

WORKING RANGE

Telescoping mode II

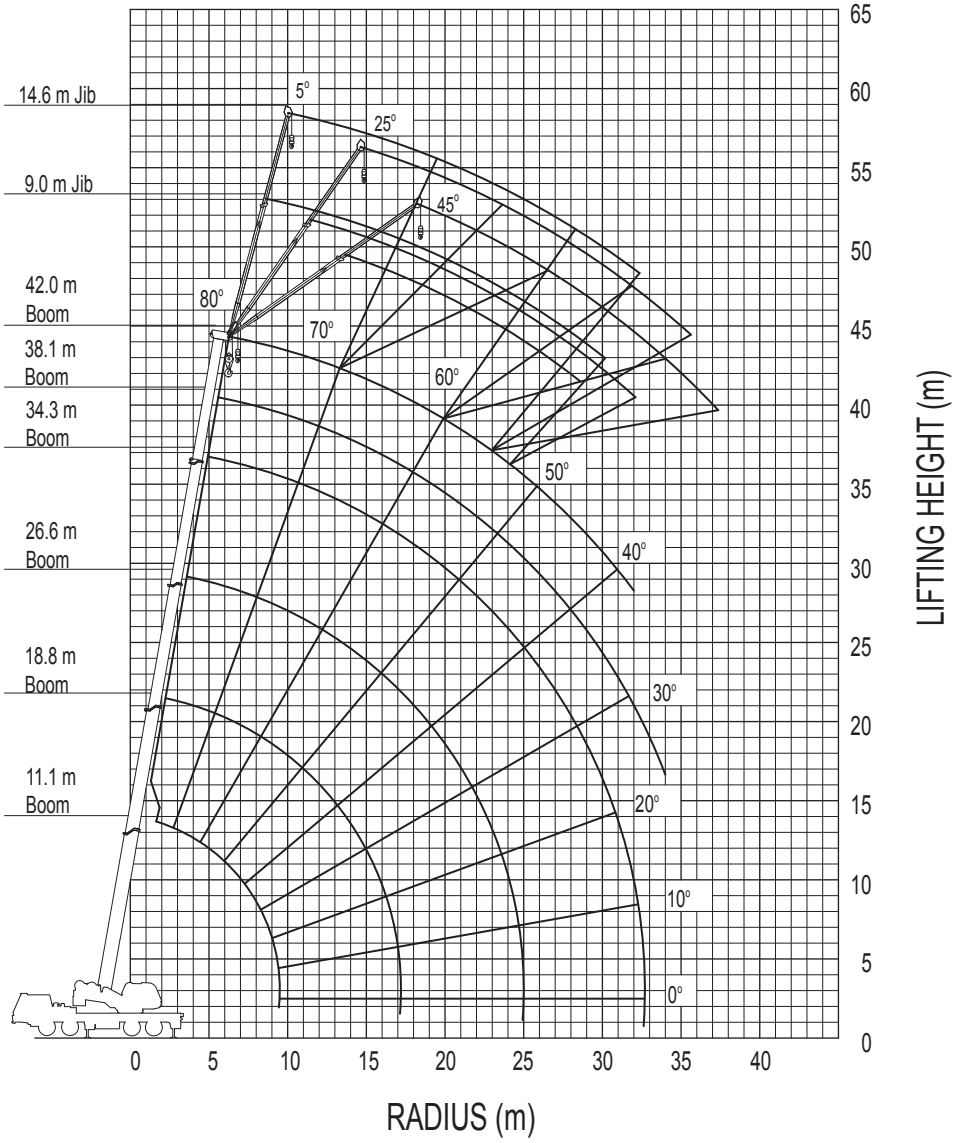

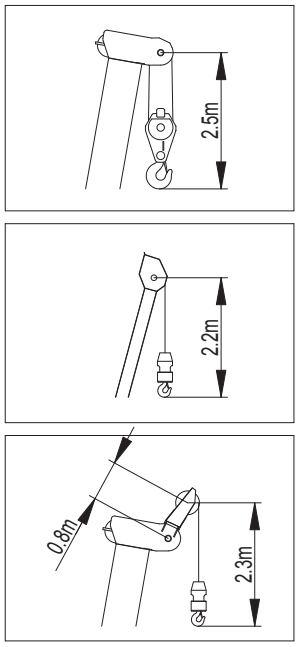

Boom Length

42.0 m Boom

38.1 m Boom

34.3 m Boom

26.6 m Boom

18.8 m Boom

11.1 m Boom

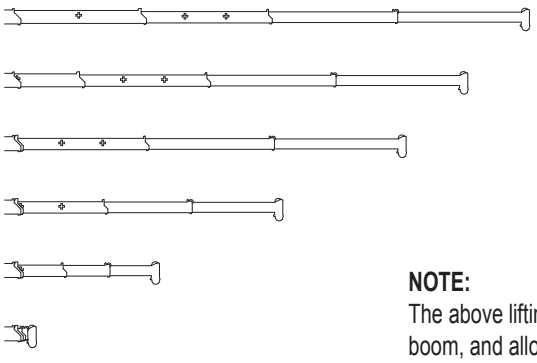

NOTE:
The above lifting height and boom angle are based on a straight (unladen) boom, and allowance should be made for boom deflection obtained under laden conditions. The above working range is shown on condition with out-riggers fully(6.8m) extended.

WORKING AREA

1. Applicable rated lifting capacities change as the ranges of the working area, depending on the outrigger extension width and whether the front jack is used.
2. When the swing automatic stop cancel switch is canceled, the swing does not automatically stop even if the crane becomes overloaded.

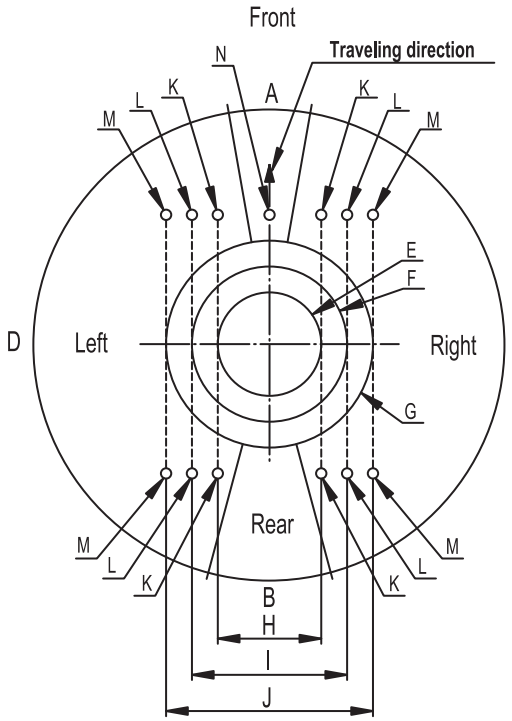

A : Over-front area
B : Over-rear area
C : Over-side area (right)
D : Over-side area (left)
E : Rated lifting capacity (capacity with outriggers at minimum extension)
F : Rated lifting capacity (capacity with outriggers at middle extension)
G : Rated lifting capacity (capacity with outriggers at full extension)
H : Minimum extension width of outriggers
I : Middle extension width of outriggers
J : Full extension width of outriggers
K : Position of outrigger jack with the beam not extended
L : Position of outrigger jack with the beam extended halfway
M : Position of outrigger jack with the beam extended fully
N : Front jack

Reference

Front jack extended
FL outrigger extended to fully, FR outrigger extended to fully
RL outrigger extended to middle, RR outrigger extended to fully

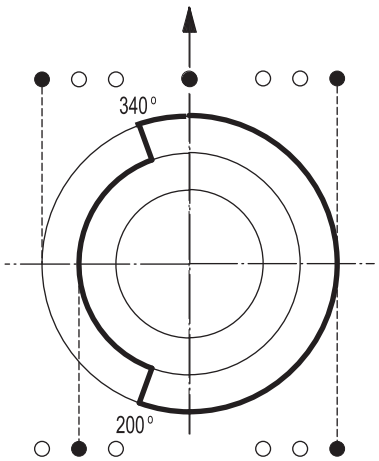

Front jack not extended
FL outrigger extended to fully, FR outrigger extended to minimum
RL outrigger extended to middle, RR outrigger extended to minimum

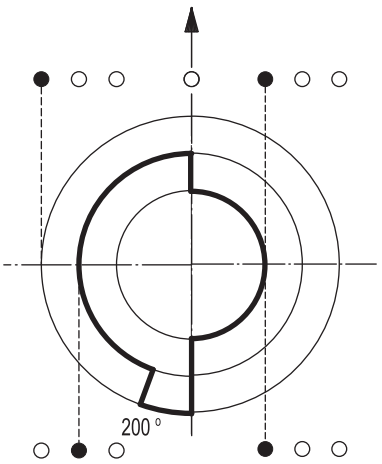

DIMENSION

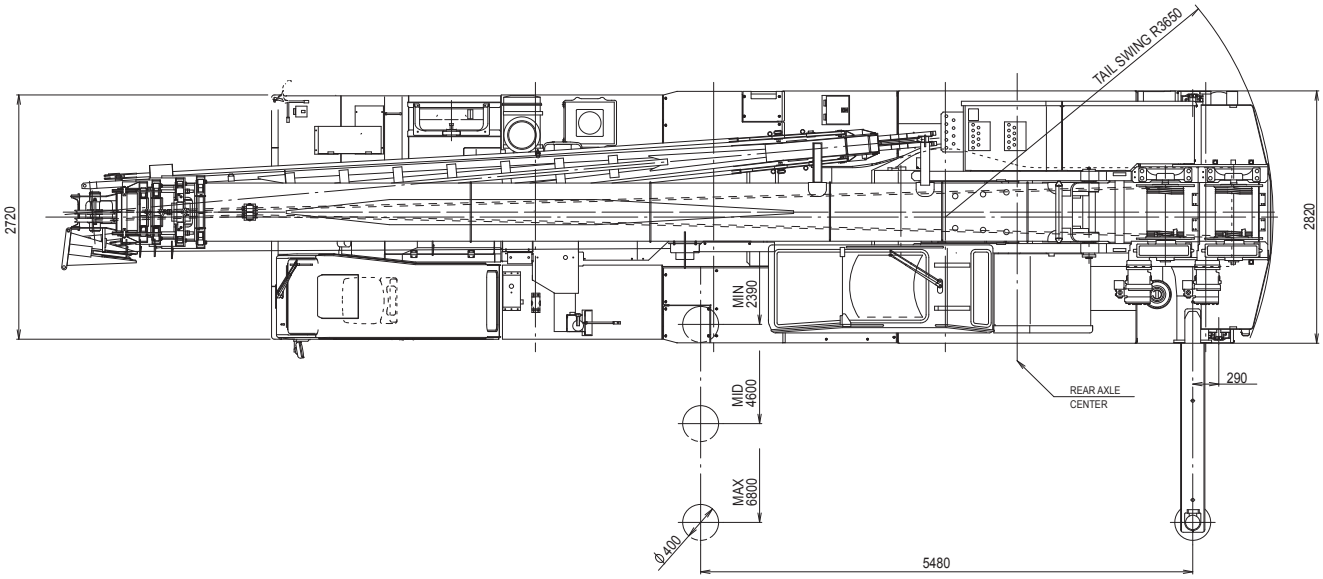

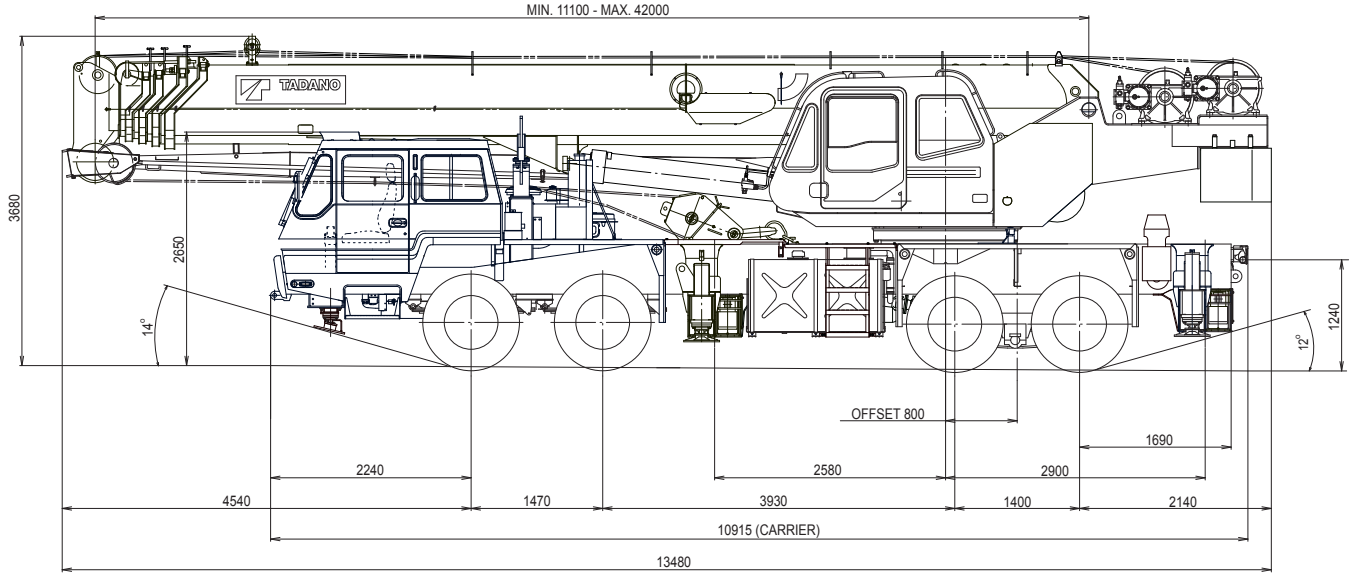

Tread (truck) - Front.....2,250 mm
- Rear.....2,110 mm